Licensed to Kuo, Li-Hung/Amaran Biotechnology, Inc.: Copying and Distribution Prohibited.

The incoming testing strategy should identify the quality attributes to measure, the sampling plan and the acceptance criteria. A statistical analysis should provide the basis for these, including AQL or process capability. The testing methods should be appropriately validated and harmonized with supplier test methods. Upon initial implementation, the control strategy should be closely monitored and improved as needed to ensure its continued suitability.

12.3.3 Semifinished Syringes

A semifinished syringe is one lacking a plunger rod. This term refers to the primary packaging in which the product is filled and sealed. CCI requirements are directly associated with the life cycle of a sterile product. During the development phase, which includes the process parameters, the product design and its specifications, the initial assessment of CCI should encompass worst-case conditions that may explore the limits of the final product and process. This can include the use of components that have undergone preparation process steps (e.g., washing and sterilization) with parameters exceeding the ones that have been defined. For example, a higher irradiation dose for sterilization can be used to demonstrate the absence of impact on the mechanical properties of the elastomeric compounds, and therefore, on the CCI of the product. The use of components from different batches and of different ages is also recommended to ensure that batch-to-batch variability and component degradation over time are adequately addressed. During this development phase, these attributes are commonly assessed via a formal risk assessment of how CCI may be affected and/or whether further evaluations are required. As per regulatory guidance, a robust rationale should be built when the actual product is not used to justify the use of these alternatives ***(98, 99).***

The assessment of CCI should follow the evolution of the product/process development. It should encompass any change in the critical parameters of the process or in the primary packaging components. Any change in the process or product should be assessed using a risk-based approach to identify any potential impact on the CCI of the final product and to conduct the appropriate studies.

When the product reaches the routine production stage, CCI should be monitored on a predefined basis. Depending on the validation strategy used and the risks identified in the process, this can include in-process checks of the integrity or release testing for integrity of the product. Additionally, it may be necessary to consider the aging of the packaging components until the end of the primary packaging shelf life to determine the potential impact on CCI, depending on applicable regulatory requirements. CCI assessment may also replace sterility testing on stability studies, which is in line with the recommendation from the FDA on CCI testing for sterile products ***(5).***

Finally, distribution aspects should receive consideration at any stage of product development. A risk evaluation associated with the different distribution channels of the product should provide the basis for the evaluation ***(100).*** Temperatures, vibrations, pressure differences, and the sizes of the air bubbles within finished syringes should also be considered. These variables can have an impact on excessive plunger movement that could lead to a loss of sterility of the product, and should therefore receive a careful assessment, especially for semifinished syringes in which it can be more difficult to prevent plunger movement.

12.3.4 Syringe Assembly and Secondary Packaging

The CCI of the assembled PFS (including finger-flange and plunger rod components) is predicated on the sterility assurance and CCI of the semifinished syringe introduced into the assembly process. The design/development of the assembly and secondary packaging processes should include risk assessment of the failure modes related to potential loss of drug product sterility and/or CCI of the semifinished syringe, including evaluation of the potential for plunger stopper and needle-shield

 © 2015 Parenteral Drug Association, Inc.

Licensed to Kuo, Li-Hung/Amaran Biotechnology, Inc.: Copying and Distribution Prohibited.

movement, and damage to the semifinished syringe. The processes should be validated to ensure that the resulting product meets established criteria and is suitable for its intended use.

12.3.5 Shipping and Distribution of Semifinished Syringes and PFSs

The semifinished syringe and PFS may be exposed to transportation conditions that can include mechanical forces, pressure changes, and vibrations during shipping and distribution throughout the life cycle of the product. Shipping studies should provide an understanding of the capability of the product to maintain CCI following exposure to representative and/or worst-case transportation conditions.

12.4 CCI Test Method Toolbox: Method Selection, Development, and Validation

CCI testing ensures that the sterility of the syringe contents is maintained. Physicochemical CCI testing methods are typically designed to challenge the PFS. Key technology options include microbial ingress, dye immersion, pressure/vacuum decay, mass extraction, high-voltage leak detection, and helium-leak detection. **Table 12.4-1** compares and contrasts the major characteristics of the methods of CCI testing.

The CCI test method selected must be suitable for its intended use. The use of visual inspection and probabilistic methods (e.g., dye ingress) may aid in gross defect detection, whereas deterministic methods are more appropriate for definitive CCI testing, if applicable.

Nondestructive methods are generally preferred, which conserves the sample for further analyses. The use of quantitative methods should indicate if leak size information is required. Testing speed and throughput are key considerations for in-process and in-line CCI testing. In addition, consideration of package content attributes should aid in ensuring that the selected methods are applicable. For example, contents with low electrical conductivity may preclude use of high-voltage leak detection methods. Another scenario may be one in which a proteinaceous drug product may clog leak defects and prevent reliable detection by vacuum-based methods (e.g., vacuum decay).

Critical method parameters must be optimized for the specific drug product package and fully demonstrate the method's applicability. Testing a number of intact samples bracketing typical drug product variations (e.g., multiple batches of C/C components, drug products of different concentrations, and packages at different sites/lines) should ensure a low false-positive probability. The use of positive control samples of known defect sizes (prepared using micropipettes, wires, capillary columns, laser drilled defects, and/or microelectromechanical systems) can optimize and demonstrate method reliability and sensitivity. Evaluation of additional types of actual and simulated real-world defects may further verify method effectiveness.

CCI test method validation should be specific to the drug product or product type and appropriate for various drug product development phases. After selection of the C/C system, packaging process, and drug product formulation, the CCI test methods selected should support various development studies, such as engineering and stability studies. Prior to licensure application, validation of the method must follow applicable ICH guidelines and regulatory requirements. Complete method robustness studies should enable future long-term routine use in commercial QC laboratories.

 © 2015 Parenteral Drug Association, Inc.

Licensed to Kuo, Li-Hung/Amaran Biotechnology, Inc.: Copying and Distribution Prohibited.

Table 12.4-1 Comparison of CCI testing methods ***(101)***

Considerations	Vacuum/Pressure Decay and Mass Extraction	High-Voltage Leak Detection	Helium-Leak Detection	Dye Ingress	Microbial Ingress
Best-Case Practical Detection Limit	2-5 μm	2-5 μm	0.1-2 μm	20-50 μm	20-50 μm
Detection	Deterministic	Deterministic	Deterministic	Probabilistic	Probabilistic
Destructiveness	Nondestructive	Nondestructive	Nondestructive	Destructive	Destructive
Quantitative	Qualitative and quantitative	Qualitative only	Qualitative and quantitative	Qualitative only	Qualitative only
Typical Applications	Container/closure (C/C) development and qualification Routine QC testing 100% in-line testing potentially feasible Sealing process validation	C/C development and qualification Routine QC testing 100% in-line testing potentially feasible Sealing process validation	C/C development and qualification Routine QC testing 100% in-line testing potentially feasible Sealing process validation	C/C development and qualification Routine QC testing Sealing process validation	C/C development and qualification Sealing process validation
Major Advantages	Potentially applicable to injection devices	Testing under normal atmospheric pressure Applicable to high-concentration proteinaceous products	Highly sensitive	Widely used for decades Industry and regulatory familiarity "Last resort" used when all else fails	Widely used for decades Industry and regulatory familiarity "Last resort" used when all else fails
Major Limitations	Possible interference with defect detection by proteinaceous products	Requirement for electrically conductive fills Not applicable to most injection devices Possibility of causing drug product degradation	Requirement for helium-containing headspace for drug product-filled syringes	Less sensitive Probabilistic detection Destructive	Less sensitive Probabilistic detection Destructive Not applicable to drug-product-filled syringes
Key Considerations	Assurance of proper fixture design to prevent plunger stopper movement and deformation Sample surface and vacuum chamber preparation	Possibility that syringe barrel area covered by needle shield is not assessable	Need to ensure that sample surfaces are free of adsorbed helium prior to testing to avoid false detection	Need to ensure that a true failure can be detected (e.g., dye in syringe, liquid in ribs)	Inability to ensure the absence of pathogens
Reference or Standard method	ASTM F2338 ***(102)***				

 © 2015 Parenteral Drug Association, Inc.

Licensed to Kuo, Li-Hung/Amaran Biotechnology, Inc.: Copying and Distribution Prohibited.

13.0 Manufacturing Requirements

13.1 Component Packaging from the Component Manufacturer

This section discusses the following principle steps of processing of prefilled syringes: preparation of syringes, filling, and secondary packaging (labeling, blistering, cartoning) for both presterilized syringes and bulk.

13.1.1 Packaging of Presterilized Syringe Systems

To ensure the isolation of the product, the assembled syringe is placed into a nest to prevent contamination from the external environment. The nest is then placed into a tub that serves as primary packaging. The tub is sealed with a Tyvek® sheet before being placed into a single or double steribag, which is also sealed using the system shown in **Table 13.1.1-1.**

Table 13.1.1-1 Packaging methods

Primary Packaging system	Material	Steribag Packaging
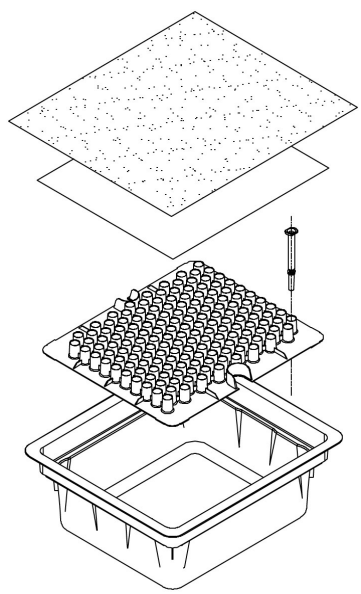	Tyvek® lid Tyvek® sheet Syringe Nest Tub	Single steribag 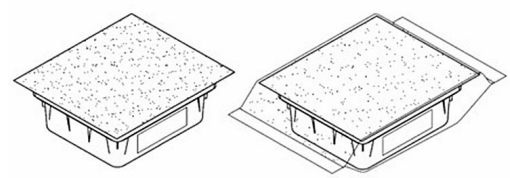 Double steribag 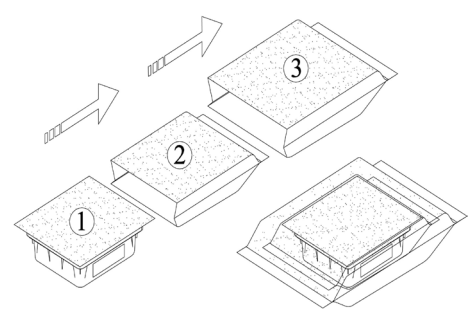

13.1.1.1 Nest

Nest supports are made of rigid plastic material with slots that can vary in number and diameter. The design of the supports ensures the syringes remain at a proper distance from one another and reduces the risk of breakage during subsequent manipulations and transfers.

Nests with 100 or 160 syringes (i.e., slots) are common for 1 mL long syringes. These nests can be made of polystyrene, polypropylene, or another material. The design minimizes deflection or warping of the tub and nest during filling. Warping leads to variations in plunger stopper position between the middle and edges of the nests.

 © 2015 Parenteral Drug Association, Inc.

Licensed to Kuo, Li-Hung/Amaran Biotechnology, Inc.: Copying and Distribution Prohibited.

13.1.1.2 Tub

The tub, which is a container of a plastic rigid material, maintains the nest in the correct position. It is usually white to permit the detection of the printing on the side of the tub by automatic camera systems. ISO 11040-7 describes common dimensions for tubs ***(103)***.

13.1.1.3 Tyvek® sheet and Tyvek® lid

A Tyvek® lid is coated and heat-sealed on top of the tub to isolate the product from the external environment before and after sterilization to obtain a sterile barrier. Single or double Tyvek® sheets consist of one (single) or two sealed foils (double) to ensure sufficient protection of the glass barrels during depackaging operations.

The Tyvek® lid is suitable for the sterilization methods described under **Section 13.2**. For further processing, the correct position of the sealing, the strength of the sealing (which might be influenced by the type of glue used to seal the lid), and any imprinting on the lid must be considered. The sterile barrier system consists of the tub sealed by the Tyvek® lid. The protective bag (single or double steribag) covers the sterile barrier system and its contents, preventing particle contamination and damage. **Section 13.1** discusses different methods of tub openings.

13.1.1.4 Steribag

Enclosing the tub into a steribag that is welded shut creates another barrier against possible environmental contamination and facilitates the movement operations of the primary packaging of assembled syringes. Again, consideration must be given to the size and position of the seals on the steribag for automated bag opening prior to filling.

The steribag is composed of a porous plastic portion (Tyvek®) for the penetration of the sterilization agent and a nonporous plastic-portion low-density polyethylene or high-density polyethylene (LD-PE or HD-PE). The configuration of the steribag, header bag, and reel bag depends on the dimension of the porous portion.

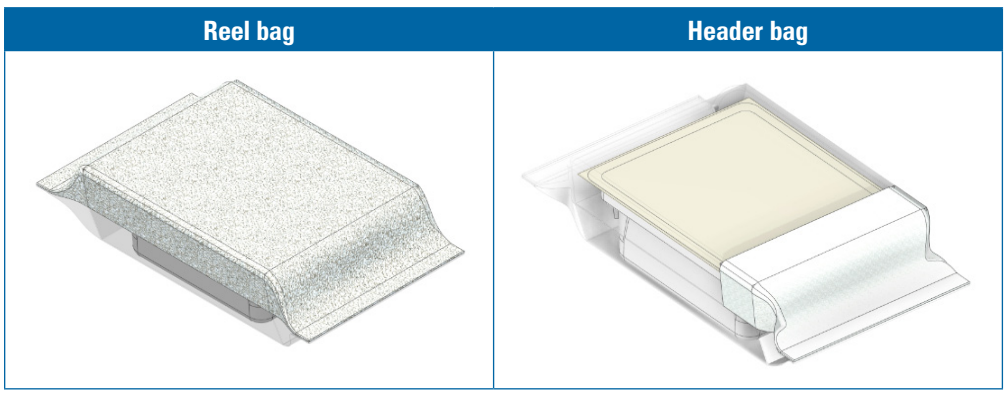

Figure 13.1.1.4-1 Steribag Components

Steribags are available in different dimensions for packaging. The selection of the steribag depends on the depackaging equipment. Depending on the depackaging process, single or double bagging might be more suitable. These options must be identified when sterilization validation occurs.

 © 2015 Parenteral Drug Association, Inc.

Licensed to Kuo, Li-Hung/Amaran Biotechnology, Inc.: Copying and Distribution Prohibited.

13.1.1.5 External Box

To facilitate the movement of the primary packaging and avoid creating a barrier to the sterilization agent, the tub is ideally packaged in a plastic box that can be sterilized (see **Figure 13.1.1.5-1** for an example).

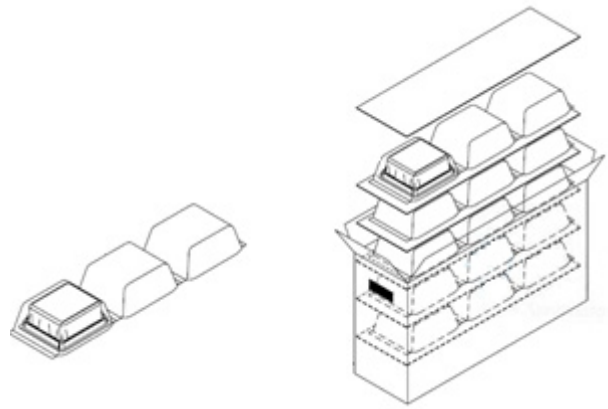

Figure 13.1.1.5-1 Packaging configuration

13.1.2 Presterilized Component Sterilization

The packed and palletized units described above undergo a sterilization process. If the sterilization process uses EO, then an aeration phase is needed to eliminate the chemical residues created during the process. Validation of the sterilization process demonstrates the quality of the process, the removal of EO residues, as well as the sterility and endotoxin levels ***(55).*** A qualified subcontractor versed in using EO can develop these processes.

If validated in accordance with ISO 17665-1, Sterilization of Health Care Products – Moist Heat – Part 1: Requirements for the Development, Validation and Routine Control of a Sterilization Process for Medical Devices, ISO 11137, Sterilization of Health Care Products – Radiation – Part 2: Establishing the Sterilization Dose, and ISO 14937, Sterilization of Health Care Products – General Requirements for Characterization of a Sterilizing Agent and the Development, Validation and Routine Control of a Sterilization Process for Medical Devices, then other sterilization methods can also be considered ***(86,104,105).*** These methods can include gamma sterilization (not suitable for glass syringes due to discoloration [turns clear glass amber]), steam sterilization, and electron beam sterilization.

13.1.3 Bulk Syringes

A supplier can deliver prefillable syringes to the pharmaceutical company in the "not washed and not sterilized" form (i.e., as bulk syringes). The pharmaceutical company performs the processing steps, such as washing, siliconization, assembly of the needle shield, and sterilization. After the glass barrel formation and needle assembly steps, the bulk syringes are placed into a plastic rondo tray, then into a plastic or cardboard box.

13.1.4 Rondo Trays: Materials, Dimensions, and Designs

Bulk syringes are packed in plastic (polystyrene and polyethylene terephthalate) rondo trays. The pharmaceutical company and the supplier agree to the material, dimensions, configuration, and number of syringes per rondo tray. A certain number of rondo trays are stacked in a specific orientation (**Figure 13.1.4-1**) and wrapped with a plastic bag for protection.

 © 2015 Parenteral Drug Association, Inc.

Licensed to Kuo, Li-Hung/Amaran Biotechnology, Inc.: Copying and Distribution Prohibited.

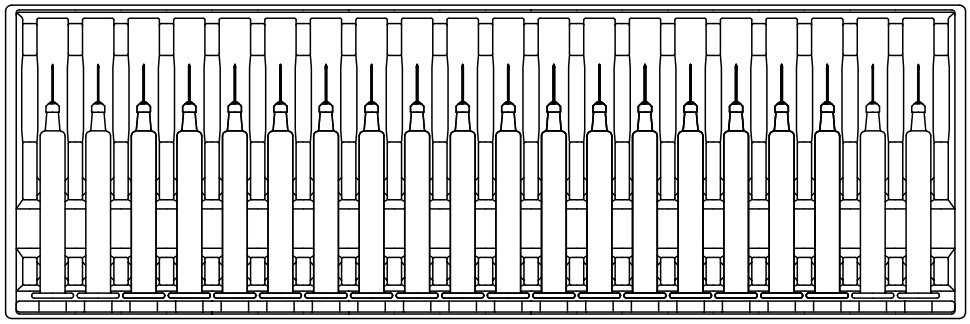

Figure 13.1.4-1 Rondo Tray

13.1.4.1 Secondary Packing of Rondo Trays

The filled rondo trays are packed in plastic (corrugated polypropylene boxes) or cardboard boxes to avoid damage during transport. For the biotechnology applications that are the subject of this technical report, corrugated polypropylene boxes are considered state-of-the-art. The supplier and pharmaceutical company agree to the material, dimensions, and configuration (see **Figure 13.1.4.1-1** for an example).

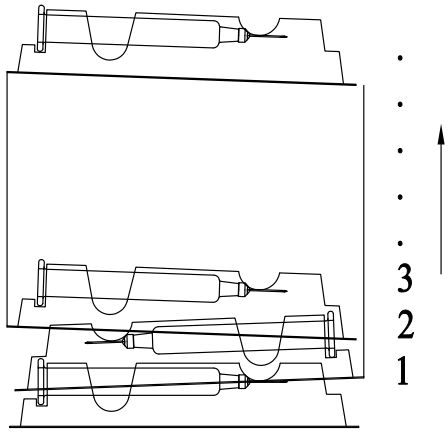

Figure 13.1.4.1-1 Packaging orientation illustration

13.2 Machinability

13.2.1 Filling of Presterilized Syringes (Tub-Nest Configuration)

Introduction of syringe components (syringes and plunger stoppers) into the filling line can be accomplished with presterilized (ready to be filled) syringes. There are different ways to introduce syringes into the clean room, and the level of automation varies from line-to-line and site-to-site.

13.2.2 Electron Beam Tunnel

After being unwrapped, outside surface decontamination occurs by introducing the naked tubs into an electron beam tunnel. The dose for sterilization is often set at 25 kilogray (kGy), which for most applications is more than needed given the very low bioburden on the outside surface of the tubs. An exhaust system removes the ozone generated by the electron beam. Using this method of outside decontamination requires demonstrating that the tub/nest configuration is compatible with remaining impurities or process contaminants. The tunnel unloads directly into the filling area.

 © 2015 Parenteral Drug Association, Inc.

Licensed to Kuo, Li-Hung/Amaran Biotechnology, Inc.: Copying and Distribution Prohibited.

13.2.3 Hydrogen Peroxide Pass-through Locks

Hydrogen peroxide is a sterilizing agent suitable for externally decontaminating the tubs before introduction into the filling area. However, the hydrogen peroxide must not ingress into the tubs as this could have negative effects on the product.

13.2.4 Low-Pressure Plasma

The low-pressure plasma (LPP) unit is a process that decontaminates the outside surface of the syringe tub after removal of the protective bag and before entering the filling line. However, the process only removes low levels of incidental bioburden that may contact the tub during bag removal and transfer to the LPP unit. Because these operations are accomplished under laminar flow units producing Grade A quality air, any incidental contamination is low. The purpose of the LPP unit is to protect the environment within the filling line, not to sterilize the components.

The decontamination mechanism is UV light produced by generation of the plasma under low pressure. Plasma is a partly ionized gas. Using LPP to generate the UV light allows the plasma to be generated around the object, thereby directly contacting the surface of the object and eliminating any shadow areas. Measurement of cycle parameters and UV light output (by spectrometer) enables automatic confirmation of a satisfactory cycle.

UV light is also a sterilization method for surface decontamination. Neither the UV light nor the plasma can penetrate the object undergoing sterilization. When using the UV light as a decontamination method, the target microbiological reduction is log 4 (as opposed to log 6 for use as a sterilization method) ***(99)***.

13.2.5 Alcohol Wipe Disinfection Followed by Automatic Bag Opening and Transfer

In less automated processes, the bag with the tub is sprayed or wiped with alcohol before introducing it into higher classified areas. The disinfectant is commonly isopropanol, n-propanol, ethanol, or mixtures thereof. For a double-bagged tub, removal of the first bag might occur after being sprayed as it moves from a controlled but unclassified area to a Grade C area. The second bag can then be removed as it moves from a Grade C to a Grade A area. Ideally, a debagging unit should provide the automation needed for this critical introduction. In some recent cases, an automated spray tunnel replaces the manual spray. **Table 13.2.5-1** outlines a possible process for completing these tasks.

 © 2015 Parenteral Drug Association, Inc.

Licensed to Kuo, Li-Hung/Amaran Biotechnology, Inc.: Copying and Distribution Prohibited.

Table 13.2.5-1 Process for Filling Presterilized Syringes

Process step	Description
1. Plunger stopper introduction	The three main plunger stopper insertion methods are the mechanical vent tube, vacuum insertion tub, and vacuum bell methods. Mechanical vent tube method A transfer arm moves the plunger stoppers over the vent tubes. A push rod then pushes and compresses each plunger stopper down to the bottom of the vent tube. The vent tube retracts out of the syringe barrel, and the push rod remains behind. The plunger stopper exits the vent tube and expands. The push rod retracts out of the syringe barrel, and the table moves to a new filled syringe position for the next plunger stopper insertion cycle. Due to differences in geometry and construction materials of the plunger stoppers, dedicated format parts (e.g., bowl or tracks) may be required. Vacuum insertion tub The plunger stopper is moved into a small enclosure, which seals the syringe, and a vacuum is pulled. Then, a push rod pushes the stopper a certain distance into the syringe, and the plunger stopper slides into the final position due to the vacuum. Vacuum bell method This is similar to the vacuum insertion tub, but does not include a push rod, meaning the stopper is pulled into the syringe by vacuum only. This method is mainly used for nested stoppers.
2. Tub delidding	The tub is moved into the fill area, and the Tyvek® seal sheet is peeled off and discarded. To make this operation easier, the rim of the tub might be heated to plasticize the glue.
3. Tub Inlay Sheet removal	The tub is conveyed to a second station, where the Tyvek® inlay sheet is removed.
4. Tub denesting	The tub is conveyed to the denester station, where the nest is lifted out of the tub and positioned on a coordinate table by a mechanical arm. The nest is lightly shaken to ensure that the syringe flange bottoms are in contact with the nest.
5. Syringe filling	The path of syringe filler consists of a holding tank and multiple pumps with filling needles. Different types of pumps are used in the process (e.g., rotary piston pumps, peristaltic pumps, membrane pumps, time-pressure systems). The user is responsible for evaluating and validating a method and process for the operation. The determination of the size of the filling needles is based on the required fill volume and solutions properties. Nitrogen overlay during filling/stoppering might be considered for oxygen-sensitive products. Discharge rate, fill needle movement, and other configurable settings can be adjusted to minimize undesirable filling characteristics (e.g., splashing, dripping). Filling volume accuracy must be well characterized to meet the end-user requirements.
6. Plunger stopper insertion	The three main plunger stopper insertion methods are the mechanical vent tube, vacuum insertion tub, and vacuum bell methods. In the mechanical vent tube method, the coordinate table moves filled syringe barrels under the mechanical vent tubes. The vent tubes insert the plunger stoppers into the syringes at the same time as the vibratory bowl conveys, sorts, and inverts sterile plunger stoppers down linear tracks for insertion. A transfer arm moves the plunger stoppers over the vent tubes. A push rod then pushes and compresses each plunger stopper down to the bottom of the vent tube. The vent tube retracts out of the syringe barrel, and the push rod remains behind. The plunger stopper exits the vent tube and expands. The push rod retracts out of the syringe barrel, and the table moves to a new filled syringe position for the next plunger stopper insertion cycle. Due to differences in geometry and construction materials of the plunger stoppers, dedicated format parts (e.g., bowl or tracks) may be required.
7. Tub re-nesting	Upon completion, the nest is removed from the coordinate table by the mechanical arm and returned to its original tub.

 © 2015 Parenteral Drug Association, Inc.

Licensed to Kuo, Li-Hung/Amaran Biotechnology, Inc.: Copying and Distribution Prohibited.

13.3 Filling of Bulk Syringes

The processing approach for bulk syringes and the approach for presterilized syringes described in the previous section differ in that preparation of bulk syringes occurs at the location where filling occurs. Preparation includes washing, siliconization, and sterilization prior to filling. Although this provides direct process control, it also requires a high level of internal subject matter expertise. **Table 13.3-1** outlines a possible process for completing these tasks.

Table 13.3-1 Process for Filling Bulk Syringes

Process step	Description
1. Washing	Conducted with water to reduce particle levels, bioburden, lower endotoxin levels to acceptable levels, and lower levels of residue, such as tungsten (when required). Typically, washing, siliconization, and fitting of needle shields are performed on one machine, usually in a Grade C area under laminar flow. Consists of one or more cycles of rinsing with purified water (inside and outside of the barrel) followed by a final rinse with WFI. It is good practice to avoid recycling any of these rinses and to use only one pass. After washing, one or more drying steps with sterile filtered, pressurized air removes excess water. Process should result in a reduction of particles as well as endotoxin and bioburden levels because the syringes are subsequently steam sterilized.
2. Siliconization	Discussed in **Section 10.0**. For 1 mL long syringes with a staked needle, the process is usually performed with pure, medical-grade silicone oil of predefined viscosity. State-of-the-art approach is dynamic spraying of oil using a spraying nozzle. This technique allows application of silicone oil with uniform distribution and adequate quantities to ensure functionality of the syringes, without over-application of the oil. Also includes siliconization of the outside of the needle.
3. Fitting of Needle Shields	The final step before sterilization. Needle shields are provided via vibrator-bowl/conveyor-belt systems and mechanically pushed onto the syringes. Care must be taken not to pierce the needle shields because this would compromise the CCI of the system. Machines have units that check 100% of the integrity of the needle shields. The plastic caps on RNSs should not be damaged. Some operations fit the needle shields after separate sterilization of the syringes and needle shields.
4. Sterilization	It is good practice to transfer automatically the washed and siliconized syringes in holding systems to an autoclave under laminar flow in a Grade C environment (e.g., robotic systems). Steam sterilization in the autoclave is performed using a validated process. The validation needs to consider hard-to-reach areas in the C/C and the possibility that needle shields may become dislodged during the process.
5. Filling	Bulk syringes are usually fed into the filling machine in a single-lane mode, in contrast to the filling of presterilized syringes, which remain in the nest during filling. Filling is performed in a Grade A laminar flow environment with a Grade B background. Restricted access barrier systems have improved the classical aseptic process by separating operators from the critical fill areas. The use of isolators in a Grade C area has increased in recent years adding the advantage of fully automated decontamination. Several pump systems are used—often alternatively—on the same machine.
6. Stoppering	Two types of stopper placement technologies are available: placement tube/pin combinations and vacuum stoppering. Technology selection should be on a product-by-product basis. Placement tube/pin combinations allow precise placement but require a certain size of air bubble to avoid wet plunger stoppers. In contrast, vacuum stoppering can be used to fill syringes with a minimal air bubble, which can be very useful for the application of viscous solutions by avoiding the physical pressure-buffering effect of the air bubble.

© 2015 Parenteral Drug Association, Inc.

Licensed to Kuo, Li-Hung/Amaran Biotechnology, Inc.: Copying and Distribution Prohibited.

13.4 Visual Inspection

The purpose of the visual inspection process is to identify defects in filled syringes and reject those that do not meet established criteria. The visual inspection process is performed by trained technicians prior to assembly in specially designed rooms. The European Pharmacopeia in Section 2.9.20 describes visual inspection and provides details on both the apparatus consisting of a black and white background with a defined light source and the inspection method ***(85)***.

Syringe and plunger stopper inspection occurs during the visual inspection process. The process identifies and classifies defects, such as those described in **Table 13.4-1.** For each container, technicians document defects in a "defect library," which should include pictures and descriptions of each defect. For training purposes, operating procedures should provide documentation of defect classification and the handling of rejects. The classification of the defects must include an acceptance criterion for the number of rejected syringes per defect before further actions are initiated.

Table 13.4-1 Examples of post-filling visual inspection defects

Inspected Area	Examples of Defects	Inspected Area	Examples of Defects	Inspected Area	Examples of Defects
Syringe Barrel	Cracked	Plunger Stopper	Liquid in the ribs	Needle Shield	Bent
	Air line		Tilted		Missing
	High fill		Upside-down		Discolored
	Low fill		Soiled condition		Broken
	No fill		Foreign material		
	Foreign material		Scuffed		
	Damaged finger flange				

After the syringes are filled and closed in the syringe filling line, the syringes are taken to the visual inspection area or stored at the intended storage conditions for future inspection. If inspection occurs later, then technicians must provide adequate time to allow the syringes to reach ambient temperature before inspection begins. Otherwise, water condensation on the outer syringe surface could negatively affect inspection.

The visual inspection process starts once the syringes arrive at the inspection area. For manual inspections, each trained technician chooses a number of syringes and visually inspects each for the defects described in the defect library. Technicians identify syringes without defects as such and allocate accordingly; syringes with major and critical defects are rejected and segregated. Each trained technician documents the number of rejected syringes per defect. The inspection process continues until all syringes in a batch have been inspected.

13.4.1 Semiautomated Visual Inspection

In the semiautomated process, manufacturers may use denesters to remove the syringes from the tubs and automatically place the syringes on a moving track. The syringes move at a certain rate in front of the trained technician, who manually diverts any rejected syringes into a different track.

13.4.2 Automated Visual Inspection

Performing the visual inspection process may use a fully automated inspection machine on which syringes are denested, placed on a moving track, inspected by a vision system, and renested back into tubs or packed in rondo trays for subsequent assembly.

 © 2015 Parenteral Drug Association, Inc.

Licensed to Kuo, Li-Hung/Amaran Biotechnology, Inc.: Copying and Distribution Prohibited.

The design of automated inspection equipment must consider factors that affect product quality. For example, an assessment of the effect of spinning, photo-exposure, and heat generated by equipment must ensure that the biologic product is suitable for automated inspection. Test runs with equipment or theoretical estimates leveraging stability data are recommended as part of the equipment specification and design.

Trays or tubs of filled syringes are fed into the inspection machine; syringes are detrayed/denested and automatically inspected for defects. Defective syringes are ejected from the machine and are commonly collated by defect category. Acceptable pieces are placed into trays or tubs for further processing. As part of the machine qualification, finished syringes undergo manual AQL inspection to ensure that the automated inspection machine is operating within its qualified state.

The automated inspection machine is qualified against a defect library. This library contains descriptions of C/C and product-specific defects and should remain current. Prior to inspecting batches of filled syringes, the inspection machine is challenged with the defect library to ensure that it is operating within the desired parameters. More details are available in PDA *Technical Report No. 43: Identification and Classification of Nonconformities in Molded and Tubular Glass Containers for Pharmaceutical Manufacturing* ***(33)***.

13.5 Final Drug Assembly and Product Secondary Packaging

Secondary packaging and final drug assembly are separate unit operations. Only high-throughput lines may combine filling, inspection, assembly, and final packaging operations. Additionally, final assembly sometimes has specific requirements for individual markets. Smaller packaging lots require frequent changeovers, so staging before final assembly makes sense.

Secondary packaging for syringes encompasses labeling, blistering, and cartoning. For this technical report, needlestick prevention devices and pen assemblies are out of scope.

13.5.1 Labeling, Plunger Rod, and Backstop Placement

In general, component suppliers label either the syringe or the surrounding needle-safety device. Labels might be transparent, semitransparent, or colored. Labels might also include graduations if not already printed on the glass barrel. Also included in the label are areas for variable data printed on line during production, such as the expiration date and batch number. Finally, there are coding areas, such as lumicodes, which check automatically the presence and position of labels.

This unit operation can also include the placement of backstops. Backstops are fitted onto the finger rest of the syringe and enlarge the grip area for injection while securing the plunger from accidentally being pulled out.

Plunger rod insertion for 1 mL long syringes includes the screwing-in motion of the threaded top of the rod into the threaded plunger stopper. The setting of the machine normally includes a torque that determines the final position. An important requirement is minimal movement of the plunger stopper during plunger rod placement. The risk is that the plunger stopper will move back into the nonsterile area of the syringe or the plunger stopper will move to the proximal end of the barrel, creating an overpressure inside that leads to splashing during removal of the needle shield.

 © 2015 Parenteral Drug Association, Inc.

Licensed to Kuo, Li-Hung/Amaran Biotechnology, Inc.: Copying and Distribution Prohibited.

13.5.2 Blistering

Modern blister machines automatically place the syringes into thermoformed blister bodies. The sizes and shapes vary by use and size of the plunger rod and backstop. The manufacturer usually places low cost, frequent-dose products, such as heparin, into multisyringe blisters (i.e., blisters of five syringes), and pack less frequently dosed and higher-cost products into single-syringe blisters. The most common blister material is polyvinylchloride; polyethylene terephthalate and polypropylene are also blister materials.

Manufacturers can seal the blister with plastic foil, but paper or Tyvek® foils are also common. Balancing the need for complete sealing of the blisters and easy opening must be considered and carefully managed. Most blistering operations are performed under clean (i.e., controlled, not classified), but not aseptic conditions. Gassing the sealed blisters with EO, or in rare cases by gamma irradiation, can achieve external surface sterility of the syringe. The design of the blister ensures that the syringe remains undamaged during transport. Ideally, the plunger rod is fixed in the blister to avoid plunger movement during air shipment and ensure that the plunger stopper does not move into the nonsterile areas of the syringe. Sometimes manufacturers pack alcohol swabs into the blisters for the user's convenience. There are other packaging configurations in use as well that pack the syringe or syringes directly into a specially designed carton without blistering (Dividella-type packaging).

13.5.3 Cartoning

Automated lines can also perform cartoning. Component producers must add variable data, such as batch number and expiration date, and bar codes or data matrix codes to the boxes online using inkjet or laser printing.

Based on the blister size, the carton size and number of syringes will vary per box. Additionally, the blister inserts the folded patient information leaflet or booklet into the boxes.

13.5.4 Bundling and Palletizing

After cartoning of the syringe blisters, the cartons might be bundled and palletized into suitable packaging configurations for storage and shipping.

13.5.5 Special Considerations for Serialization

In an effort to stop the introduction of falsified medication into supply chains, an increasing number of authorities mandate individual serialization of package units. Initially, this was performed directly on the individual syringes with printing, etching, or other techniques. Today, manufacturers mark each package unit with a unique identifier. A central worldwide computer network generates and tracks the identifier. The healthcare provider or pharmacist at the point-of-sale can use this code to verify the identity of the product.

 © 2015 Parenteral Drug Association, Inc.

Licensed to Kuo, Li-Hung/Amaran Biotechnology, Inc.: Copying and Distribution Prohibited.

14.0 Drug Product Compatibility

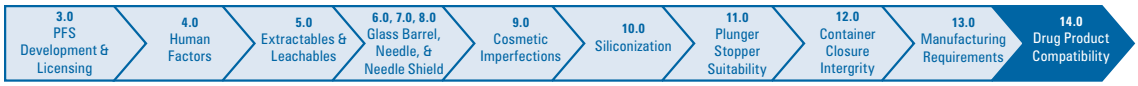

This section focuses on the compatibility of a drug product with the various syringe components discussed in the previous sections, and the possible impact of surface interactions and stresses on drug product stability due to drug product manufacturing, shipping, storage, and handling.

14.1 Risk Assessment

Risk assessments are recommended to determine the sensitivity of the protein to various stress conditions and interfaces. It is important during the risk assessment to understand the molecular characteristics, including any known degradation pathways, to leverage this information during the risk assessment.

A risk assessment typically uses a risk-based approach involving FMEA to determine the criticality of process parameters and their effects on critical quality attributes, quality attributes, or manufacturing attributes. In the area of compatibility, an assessment of all interfaces of the product during manufacturing, and ultimately filling in the PFS, must be performed to determine their impact on the product. Any risk-mitigation activities applied must minimize the risk to the product. The risks are identified, scored, and characterized as being high, medium, or low to determine the mitigation strategy. The risk assessment makes it possible to obtain a complete understanding of the processes that the product will be subjected to, and helps to determine any incompatibilities that may result from the drug product manufacturing process.

The risk assessment should involve members of the research and development unit, and the manufacturing unit to ensure the characteristics of the product and manufacturing process are understood. Once actions that are associated with risk-mitigation activities are complete, the FMEA is reevaluated, rescored, and relevant documents are updated accordingly. **Table 14.1-1** presents only an illustrative example of the output of a risk assessment exercise, including process steps, parameters, risk rationale, criticality based on scoring, and recommended actions. For further information on conducting formal risk assessments, refer to *PDA Technical Report No. 54: Implementation of Quality Risk Management for Pharmaceutical and Biotechnology Manufacturing Operations* ***(36)***.

 © 2015 Parenteral Drug Association, Inc.

Licensed to Kuo, Li-Hung/Amaran Biotechnology, Inc.: Copying and Distribution Prohibited.

Table 14.1-1 Example of Risk Assessment Output

Process Step	Process Parameter	Rationale	Criticality	Action
Filter into Filling System	Filter specification	Noncompatibility of filter with formulation that could affect the product	**High**	Use adequate filter and conduct bacterial retention study over a designated time and range integrity
Filling/ Stoppering	Residual vapor hydrogen peroxide (VHP) concentration	Possibility that residual VHP in stopper bowl, chutes, etc., will affect product; Demonstrated effect on product at specified levels	**High**	Monitor residual levels of VHP after the cycle and the profile of concentration due to air changes
Filter into Filling System	Filter contact time	Restricted time limit from bacterial retention study	**Medium**	Bacterial retention study over a designated time range
Filling	Fill speed	Need to ensure that appropriate filling speed range is defined for the product to prevent product impact	**Medium**	Shear level assessment of product for filling process
Filling	UV light exposure level from LPP	Possible effect on product of exposure to UV light	**Low**	Light level reading during LPP cycle
Stoppering	Stoppering speed	Possible effect on product and process of speed of stoppering	**Low**	Assessment of stoppering speed during operational qualification runs on isolator
Inspection	Syringe specification	Possible effect on product of specification of the product contact parts	**Low**	Confirmation that syringe is not damaged during loading and unloading from inspection equipment

14.2 Key Product and Manufacturing Attributes

14.2.1 Stability Studies

Stability studies that monitor the product in the syringe are critical to understanding the impact of the PFS on product characteristics. The stability studies should include studies in the expected/recommended storage conditions, as well as in stress temperatures to assess thermal stability in support of the intended usage and excursions. For example, if the recommended storage temperature is 2–8°C, a study may evaluate the effects of an accelerated temperature of 25°C or 30°C (depending on the stability of the drug product) and stress storage condition of 30° or 40°C. Care should be taken to choose a stress temperature based on the specific properties (e.g., melting temperature) of the product. Manufacturers should monitor photostability according to ICH guidelines to determine the effects during exposure to light ***(106)*.**

Other studies to consider are discussed in **Section 14.8,** including freeze and thaw cycling to understand the impact on protein stability in case of shipping excursions; CCI and shipping simulations via shear studies; or actual transit trials depending on the clinical phase of the product. In addition, studies to evaluate silicone and tungsten may be useful as discussed in **Section 14.5.** Manufacturers should also evaluate exposure to vapor hydrogen peroxide or other sterilizing agents used prior to filling the syringes. Finally, if the syringe will be used in conjunction with a device, the final drug product presentation can include stability studies as suggested by ICH Q1A(R2), Stability Testing of New Drug

 © 2015 Parenteral Drug Association, Inc.

Licensed to Kuo, Li-Hung/Amaran Biotechnology, Inc.: Copying and Distribution Prohibited.

Substances and Products *(107)*. **Table 14.2.1-1** presents an outline of the stability studies that may be used to assess a typical PFS program.

Table 14.2.1-1 Outline of Typical Stability Studies Used to Assess PFSs

Study	Purpose	Considerations
Product Compatibility	Assess impact of product in siliconized PFS	If siliconization is an issue, process optimization should be considered. Options without silicone, such as polymer syringes, may also be considered if process optimization does not adequately address compatibility issues.
Comparability	Compare stability to previous drug product presentation in vials, if available	Leveraging of drug product data in vials may result in an advantage for the shelf-life setting if comparability of dosage forms can be established.
Long-Term Stability	Assess impact of product when stored at recommended temperature and in accelerated and stress conditions over time	The impact on the product and the ability of the syringe to deliver the product after stability testing must be assessed. Potential problems should be noted (e.g., needle clogging, changes in forces). Long-term stability tests should include the volumes used in clinical studies. May include a bracketing approach if the exact dose is not known at the time of the study ***(58).***
Freezing and Thawing	Assess impact of freezing and thawing on product when it is stored in PFS	After the cycling, assuming that the syringes maintain stability, stability testing of the syringes should be considered to assess any reductions in the expected stability based on the initial freeze/thaw cycling of the product in the PFS.
Shear	Assess impact of shear on product in PFS	Shear may be introduced during the drug product manufacturing process and subsequent distribution steps. Shear impact may be different in benchtop testing and commercial processes.
Silicone Sensitivity	Assess impact of silicone levels on product	A PFS with appropriate control of silicone levels must be chosen.
Tungsten Sensitivity	Assess impact of tungsten on product	Select a PFS with minimal tungsten that is compatible with the drug product
Photostability	Required as per ICH guidelines ***(107)***	Provide secondary packaging and include labelling text. Additional studies might be required in typical light conditions if photostability proves to be detrimental to the product.
Device Stability	Required as per ICH guidelines	This study determines whether an ancillary device will be used and must take into account the stability of the device when it is stored in nonrecommended conditions.

14.2.2 Analysis of Stability

Analysis of stability should include physical, biochemical, and potency/activity measures as outlined in **Table 14.2.2-1**. The tests in the table are examples and include characterization assays, which are not tested for each batch. Characterization can be conducted only on selected batches until sufficient knowledge for this parameter is obtained. Regulatory agencies have requested to consider particulate analysis as an additional assessment of the stability of the drug product ***(82,108).***

 © 2015 Parenteral Drug Association, Inc.

Licensed to Kuo, Li-Hung/Amaran Biotechnology, Inc.: Copying and Distribution Prohibited.

Table 14.2.2-1 Stability analysis for PFS contents

Category	Parameter	Test Methods Examples
Physical	Appearance/Particulates	Light obscuration, microflow imaging
	Viscosity	Cone or plate viscometer/rheometer, Force measurement
Biochemical	Aggregation	Size exclusion chromatography, dynamic light scattering
	Deamidation/Oxidation	Reverse-phase HPLC, capillary isoelectric focusing gel, peptide mapping
	Conformation	Fluorescence, circular dichroism (CD)
	Potency/Activity	Biacore, ELISA, cell-based assays

During all analyses, manufacturers must give special consideration to the presence of the silicone coating in glass PFSs and the potential for the product to interact with the silicone, as well as the movement of the silicone over time or when the product is delivered (109; 110). Beyond having a direct product impact, the presence of the silicone affects the analytical techniques employed. For particulate analysis in particular, silicone must be distinguishable from other product-related particles as mentioned in **Section 10.8** ***(108).***

Depending on the fill volume of the syringe, there may be challenges for the analysis of the volumes required for visual inspection and particulate testing according to USP <788>, Particulate Matter in Injections. Manufacturers and suppliers commonly use small amounts of tungsten in the tips of glass PFSs with staked needles. The presence of tungsten has been shown to be incompatible with some products. This should be a consideration when regarding product quality. Refer to **Section 14.6.2.1** ***(81)*** for further discussion.

14.2.2.1 Force Measurements

The ability to measure the forces required to inject the drug product by means of the PFS is an important component of the stability testing process. This parameter may have an impact on a patient's ability to self-inject, or a healthcare provider's ability to use the product, as well as the reliability of the injection if the delivery is via a device. Monitoring the forces for delivery initially upon release is important. It is equally as important to monitor the forces for delivery over the intended shelf life of the drug product. This is to confirm that the potential physical changes in the drug product or in the silicone distribution in the syringe do not affect the ability of the PFS (or of the PFS in conjunction with a device) to deliver the required dose to the patient. The siliconization of the PFS, the properties of the drug product, and the needle gauge and its variability affect the forces required for delivery of the drug product. All of these issues should be a consideration when evaluating the force measurements for the drug product. Finally, syringeability, which measures the force required for delivery at a given injection rate via a needle of a predetermined gauge and length, will enable the optimal injection conditions to be determined for the drug product, taking into account the product's physical properties, flow rate, injection force, and needle gauge ***(111–114).***

14.2.2.2 Special Considerations: the Effect of Silicone on Analytical Testing, including Particle Analysis

To evaluate the effect of silicone on analytical testing and particle analysis (including light obscuration and other orthogonal analytical techniques), pooling practices are often required to overcome the challenges of low volumes per container. In addition to having a potential impact on drug product stability, the presence of silicone has a significant impact on particulate analysis via light obscuration and other orthogonal techniques used for particulate testing, such as microflow imaging. The amount of silicone oil droplets

 © 2015 Parenteral Drug Association, Inc.

Licensed to Kuo, Li-Hung/Amaran Biotechnology, Inc.: Copying and Distribution Prohibited.

generated is dependent on the sampling method (removal from the barrel or injection via a needle) used to obtain the sample from the PFS for analysis. As a result, the sampling method that is used for the drug product should be evaluated and consistently used to analyze effectively the results of the particulate analysis. In addition, degassing and/or dilution may be needed to assist in providing consistent results. USP <788> and European Pharmacopeia, Section 2.9.19 require a volume of at least 25 mL, which is challenging to obtain when the volume in a PFS is generally 1 mL or less. When considering small-volume light-obscuration methods to overcome the volume requirement, the sampling plan must be properly qualified and validated for the specific drug product. Finally, because of the impact of the silicone, using both light obscuration and orthogonal techniques capable of identifying silicone within the sample matrix during development will assist in the interpretation of the results generated during particulate analysis.

14.3 Compatibility of the Drug Product with the Plunger Stopper and Needle Shield

Drug products may come in contact with rubber material in the plunger stopper and needle shield during stability testing. For some bioproducts, incompatibility between the drug product and the plunger stopper or needle shield can lead to aggregation, increased chemical degradation, and loss of drug product potency.

14.3.1 Impact of Interaction between the Drug Product and Rubber in the Needle Shield

Incompatibility between the drug product and needle shield can lead to increased polymer formation resulting in partial or complete needle clogging. The increased risk of clogging can lead to obstruction of liquid flow, and therefore, to the requirement for higher forces to expel the product. The higher forces required to push liquid out of the syringe can cause great discomfort, especially to patients with dexterity limitations. An increase in force to expel the product could also lead to the patient not receiving the dose. There is also a risk that injecting the patient with higher-order aggregates and polymer can potentially lead to an immune response ***(115).*** Thus, a comprehensive characterization of incompatibilities between the needle shield and drug product is essential.

Experiments conducted to evaluate incompatibility of the needle shield with the drug product need to account for the surface area to volume ratio between the product on the tip of the needle and the contact surface of the needle shield material. During product stability studies in syringes, the product solution may or may not come into contact with the needle shield. Thus, to evaluate the impact of the needle shield on product quality and stability more rigorously, extractables and leachables evaluations, such as those described in **Section 5,** may be useful.

14.3.2 Impact of Interaction between the Plunger Stopper and Drug Product

Section 5 discusses further considerations of extractables and leachables related to the plunger stopper. To evaluate the impact of the plunger stopper on product quality and stability, some or all of the following studies may be performed.

- **Impact of leachables from the plunger stopper on the product —** Plunger stoppers can have metals that are leachable. It is critical to evaluate the impact of metals on drug products in stability tests.
- **Impact of silicone oil on the product —** Plunger stoppers may be coated with silicone oil that may or may not be cross-linked. **Section 14.5** provides the evaluation of interactions between silicone oil and the product.

 © 2015 Parenteral Drug Association, Inc.

Licensed to Kuo, Li-Hung/Amaran Biotechnology, Inc.: Copying and Distribution Prohibited.

- **Plunger stopper discoloration —** Some plunger stoppers may become significantly discolored when they come in contact with the product. This may lead to a loss of the visual aesthetics of the product. An evaluation of the interaction between buffer components, excipients, and surfactants on the plunger stopper is needed. Some plunger stoppers may preferentially adsorb certain excipients or surfactants, and some excipients and buffer salts may also promote greater water adsorption into the plunger stopper and result in greater dimensional distortion. This can potentially lead to plunger stopper discoloration over time and changes in the functionality of the syringe.

14.3.3 Needle Shield Permeability

Drying of the product in the needle may lead to needle clogging, increasing discomfort for the patient trying to inject the drug product through a clogged needle. Some products may have a greater propensity to become dry. For example, high-concentration formulations may become dry or form a gel more quickly than low-concentration formulations because high-concentration formulations are closer to their solubility limit and very little solvent is available for evaporation. In addition, drug product formulations may contain excipients that can precipitate, crystallize, or form a clog if solvent evaporation occurs.

Needle-shield permeability may be a factor (in addition to needle-shield incompatibility) in product clogging in the needle. Moisture loss through the needle shield could lead to evaporation of the solvent from the product on the needle tip leading to drying and clogging of the needle. The impact of relative humidity (5% to 70% relative humidity), and accelerated and stress temperatures (25°C and 40°C) on the rate of needle clogging in filled syringes should be considered when evaluating the overall risk of needle clogging. Product suppliers may perform moisture transmission studies through the needle shield to evaluate and compare needle shields.

Injection instructions should call for removal of the needle shield just prior to injection. Needle-shield removal usually leads to the release of a few drops of drug product due to initial vacuum generation followed by positive pressure in the syringes. In cases in which the drug is not injected immediately by the patient after needle-shield removal, there may be a risk that the drug product will dry out on the needle tip leading to clogging of the needle. This risk is higher in drug products that have a high concentration of proteins because these have a greater propensity to become dry. This phenomenon can lead to greater discomfort for the patient because more force to dislodge the clog (or partial clog) in the needle may be required.

For the above-mentioned reasons, it is necessary to characterize the clogging rate of the product as a function of environmental conditions and its impact for the delivery of appropriate patient instructions and training.

14.4 Needle Passage Shear

Protein therapeutics may experience multiple sources of shear stress during manufacturing processes, such as mixing, filtration, and filling. Manufacturing processes should consider the shear generated by fluid flow through the needle as it could yield sufficient torque to perturb, partially unfold, or even denature protein drug products ***(114,116).***

14.4.1 Experimental Design

Theoretical calculation is necessary to evaluate shear as the product passes through the filling and injection needles unless clinical study data has already demonstrated product efficacy with the chosen product design. The diameter and length of the needle, the flow rate (filling speed and injection speed), and the physical properties of the product (viscosity) can all affect the calculated shear. Therefore, a study

 © 2015 Parenteral Drug Association, Inc.

Licensed to Kuo, Li-Hung/Amaran Biotechnology, Inc.: Copying and Distribution Prohibited.

designed with a design space around the calculated shear to evaluate protein impact is recommended. The design space allows for some flexibility to optimize filling parameters in the future.

Several studies have shown that the loss of protein activity is proportional to the exposure time and shear rate ***(114,117)***. However, other studies have found no evidence that shear significantly destabilizes proteins, but rather, show accelerated destabilization due to the turnover of interfacial interactions ***(100)***.

The experimental design should also isolate the air-liquid interface from the stress due to shear. The stability study should include recommended and accelerated storage to evaluate the critical quality attributes through stability-indicating assays; these attributes include pH, concentration, aggregation, clipping, charge profile, potency, oxidation, and visible and subvisible particle formation.

14.5 Compatibility with Process Intermediates and Additives

A typical evaluation includes the effects of extractables and silicone—individually and in combination. As mentioned in **Section 5**, product suppliers should evaluate silicone oil compatibility for product impact with different levels and distributions of silicone oil in the product contact area. An additional study to consider is testing whether material surfaces (such as the surfaces of the container and particulate matter in the formulation) can interact with the drug product in terms of extractables and leachables.

14.6 Types of Silicone

Commonly used silicone types for siliconization include silicone fluids, silicone emulsion, and silicone dispersion. Silicone fluids are identified in major international and national pharmacopeias. **Table 14.6-1** provides the classification of silicone fluids based on their kinematic viscosities (in cSt or mm^2 per second at 25°C).

Table 14.6-1 Types of Silicone

Pharmacopeia	Classification	Viscosity Range at 25°C (cSt)
USP	Dimethicone	20 – 30,000
European Pharmacopeia	Dimethicone	20 – 1,300
European Pharmacopeia	Silicone oil used as a lubricant	1,000 – 30,000
Japanese Pharmacopeia	General	2 – 5,000

14.6.1 Silicone Compliance with Monographs

To verify the compatibility with healthcare application, **Table 14.6.1-1** shows common characteristics tested as called for in pharmacopeia monographs. The silicone oil supplier typically tests these characteristics to meet compendial requirements for medical use.

 © 2015 Parenteral Drug Association, Inc.

Licensed to Kuo, Li-Hung/Amaran Biotechnology, Inc.: Copying and Distribution Prohibited.

Table 14.6.1-1 Typical Silicone Oils Tests

Tests to Perform
Identification (infrared absorbance)
Viscosity at 2°C
Colorimetric (violet test)
Reaction of silicates
Acidity (potassium hydroxide titration)
Mineral oils
Phenylated compounds
Refractive index (at 20°C)
Heavy metals
Volatile matter or loss on heating

14.6.2 Effects of Extractables on Products (spiking controls)

14.6.2.1 Tungsten

Interactions between tungsten and some therapeutic proteins have been previously documented ***(49)***. Tungsten salts and tungsten oxides—as well as metallic tungsten particles—can remain in the syringe after the formation process. Thus, there is a need to assess the sensitivity of the drug product to tungsten. To determine the effects of (spiked) tungsten pin extracts, manufacturers should evaluate the stability of the drug product. The scope of the characterization can be dependent on the level of sensitivity observed.

14.7 Process-related Compatibility and Stability

The drug product manufacturing process can involve equipment that might affect the stability of the protein. Some of the key process steps for PFS manufacturing to evaluate include surface decontamination of syringe tubs, isolator technology for aseptic filling, automated visual inspection for defects, labeling, and packaging. A risk evaluation during manufacturing through relevant product impact studies is also needed, but is not covered in detail in this technical report.

14.8 Shock, Vibration, and Shipping Study

Agitating samples after filling should provide a preliminary understanding of how shipping and handling may affect the contact surface area at the silicone/air/solution interface and the corresponding factor under evaluation.

For biopharmaceutical products, it is important to demonstrate the stability of the protein product in both static and dynamic conditions. A common method of filling and stoppering a PFS involves placing the plunger stopper into the syringe barrel using an insertion tube or vacuum. This results in a headspace (air or inert gas) between the top of the plunger stopper and the meniscus of the drug solution. Proteins have the potential to aggregate in the presence of air-liquid interfaces. Thus, it is critical to evaluate the stability of the product under dynamic conditions (agitation) that are comparable or worse than the stress applied in a pharmaceutical supply chain.

The effect of agitation on the stability of the product should be evaluated as part of formulation development ***(67)***.

 © 2015 Parenteral Drug Association, Inc.

Licensed to Kuo, Li-Hung/Amaran Biotechnology, Inc.: Copying and Distribution Prohibited.

Following selection of the final formulation composition, the manufacturer or supplier should perform a representative shipping study, either by actual transport or applying shipping conditions as recommended by ASTM, D4169-14, Standard Practice for Performance Testing of Shipping Containers and Systems ***(6)***. Simulation should include filling the drug solution into the PFS with the desired fill volume and plunger stopper position, then shipping the syringes under worst-case representative conditions ***(117)***. Worst-case conditions vary from product-to-product but should include those for fill volume, plunger stopper placement, temperature, excipient levels, pressure, and mode of transportation (ground and air). Incorporate shipping simulation if validation can show that it is representative of the shipping routes and generates stresses higher than stresses generated by real transport ***(6,8,117)***.

© 2015 Parenteral Drug Association, Inc.

Licensed to Kuo, Li-Hung/Amaran Biotechnology, Inc.: Copying and Distribution Prohibited.

15.0 Appendix I: Electronic Common Technical Document (ECTD) Application Submission Overview

The following table is a description of elements related to prefilled syringes to consider for inclusion in each module of the CTD.

Module	Overview PROPOSED SECTIONS
1	Administrative information Cover letter and forms Letters of authorization Device manufacturer Medical Device Master File (MAF) or 510(k) Labeling Device index—description of where device content can be found
2	Introduction and overall summaries
3	Quality
5	Clinical List of clinical studies (module **Section 5.2**) Comparative bioequivalence study reports (module **Section 5.3.1.2**) Reports of postmarketing experience (module **Section 5.3.6**) References (module **Section 5.4**)

 © 2015 Parenteral Drug Association, Inc.

Licensed to Kuo, Li-Hung/Amaran Biotechnology, Inc.: Copying and Distribution Prohibited.

16.0 Appendix II: Module 3 for Electronic Common Technical Document (ECTD) Submission Overview

The following table is a description of elements related to prefilled syringes to consider for inclusion in module 3 of the CTD.

Section	PROPOSED BLA/NDA
3.2.P.1	Description and Composition of the Drug Product Describe the device constituent/component(s) (e.g., injector presentation or kit components) in a brief descriptive sentence and include in component table.
3.2.P.2.1	Components of the Drug Product No content applicable to devices
3.2.P.2.2	Pharmaceutical Development – Drug Product Describe the device constituent/component(s) (e.g., injector presentation) briefly and generally.
3.2.P.2.3	Manufacturing Process Development Describe the device constituent/component(s) (e.g., injector presentation) briefly and explain how the manufacturing process or assembly was developed. Cross-reference 3.2.P.3.3.
3.2.P.2.4	Container Closure System Provide "suitability" information for the device constituent/component(s). For delivery devices, include a high-level overview of drug-specific data showing that delivery is accurate, 510(k) history, summary of human factors studies of target population, shear studies, component aging, ISO 10993 data, etc. Link to 3.2.R (medical devices). Cross-reference to device master files.
3.2.P.2.5	Microbiological Attributes Provide information regarding testing (e.g., development, stability, and shipping studies) to confirm that CCI is maintained.
3.2.P.2.6	Compatibility Describe the compatibility of the device with the drug product if there is contact, and provide summaries of compatibility studies if conducted. Include a human factor engineering summary report with a cross-reference to the studies in Section 3.2.P.2.
3.2.P.3.1	Manufacturers Provide names and addresses of the sites performing assembly, kitting, or packaging operations.
3.2.P.3.3	Description of Manufacturing Process and Process Controls Include a description of the final combination product assembly steps and testing, but not detailed component manufacturing (parts molding or machining). Include hold times, process flow diagrams, assembly or packaging equipment, etc.
3.2.P.3.4	Control of Critical Steps and Intermediates For integral combination products, define intermediate checks, in-process controls, and critical process parameters of the manufacturing or assembly process. The content is dependent on product complexity. This section is not applicable to kit components.
3.2.P.3.5	Manufacturing Process Validation and/or Evaluation Provide evidence that installation qualification, operational qualification, production qualification (IQ/OQ/PQ) and process validations were completed (e.g., device release test data on multiple representative clinical/stability/commercial lots).

© 2015 Parenteral Drug Association, Inc.

Licensed to Kuo, Li-Hung/Amaran Biotechnology, Inc.: Copying and Distribution Prohibited.

Section	PROPOSED BLA/NDA
3.2.P.5.1	Specifications Provide a table of release specifications for the combination product with limited, key device quality inspection or performance test specifications (ranges). Do not include device component design specifications.
3.2.P.5.2	Analytical Procedures Provide an adequate summary of the release test method/protocol for each reported device component specification.
3.2.P.5.3	Validation of Analytical Procedures If noncompendial, provide summary validation information (e.g., gauge repeatability and reproducibility [R&R]) with data on measured parameters or cite standards. Descriptive device inspections may not require validation.
3.2.P.5.4	Batch Analysis Provide release test results for device characteristics for clinical and/or process validation lots as part of overall combination product batch data.
3.2.P.5.6	Justification of Specifications Provide overview of device design inputs that justify specifications (e.g., force to actuate). Supporting design verification data may be necessary.
3.2.P.7	Container Closure System Provide a high-level description of device and device components. Link to 3.2.R. Cross-reference to device master file.
3.2.P.8.1	Stability Summary and Conclusion Provide a summary of the device constituent aging test program and combination product functional stability test program, stability-indicating parameters, and proposed shelf life for the combination product. Present and discuss stability data.
3.2.P.8.2	Post-approval Stability Protocol and Commitment Provide commitments (e.g., annual stability lots) and protocol summaries.
3.2.P.8.3	Stability Data Provide functional stability testing data.
3.2.A.1	Facilities and Equipment Describe the combination product (final assembly/kitting) facility, flow diagrams, principal equipment, other products, and cross-contamination procedures.
3.2.R	Regional Information (medical devices) United States: 510(k)-like document for review by the Center for Devices and Radiological Health of FDA; European Union: Technical file-like document for review by notified body or competent authority

 © 2015 Parenteral Drug Association, Inc.

Licensed to Kuo, Li-Hung/Amaran Biotechnology, Inc.: Copying and Distribution Prohibited.

17.0 APPENDIX III: Tests, Standards, and Guidance Documents for PFS Combination Products

The following table is a guide to the relevant tests, standards and guidance documents for PFS combination products by individual component and the assembled system.

Category	Descriptions of Tests, Standards, and Guidance Documents		Syringe Component				
			Syringe	Plunger stopper	Needle	Needle Shield	Assembled
Protection	The container closure system provides the dosage form with adequate protection from factors that can cause degradation in the quality of the drug product over its shelf life.						
Sterility	Microbial limits and bioburdens/endotoxins		•	•	•	•	
	21 CFR 610.12 USP <71> Sterility Tests	EU Annex 1 Pharmacopeia European 2.6.1					•
Sterilization	FDA Guidance for Industry - Submission Documentation for Sterilization Process Validation in Applications for Human and Veterinary Drug Products 1994 USP <1211> Sterilization and Sterility of Compendial Articles	ISO 11135-1 (2007) ISO 11137-1 (2006) ISO 11137-2 (2006, revised) ISO 11137-3 (2010, revised) ISO 11138 (2006)	•	•	•	•	•
Sterility	ISO 11737-1 (2006) ISO 17665-1 (2006)	ISO 14937 (2009) ISO 10993-7 (2008)	•	•	•	•	•
Container Closure Integrity	USP <1207> Sterile Product Packaging—Integrity Evaluation FDA Guidance for Industry, Container and Closure System Integrity Testing *in Lieu* of Sterility Testing as a Component of the Stability Protocol for Sterile Products FDA Guidance for Industry, Container Closure Systems for Packaging Human Drugs and Biologic ASTM F2338 ICH Q5C EMA, Note for Guidance on Pharmaceutical Development						•

 © 2015 Parenteral Drug Association, Inc.

Licensed to Kuo, Li-Hung/Amaran Biotechnology, Inc.: Copying and Distribution Prohibited.

Category	Descriptions of Tests, Standards, and Guidance Documents			Syringe Component				
				Syringe	Plunger stopper	Needle	Needle Shield	Assembled
Safety	Packaging components should be constructed of materials that will not leach harmful or undesirable amounts of substance.							
Glass	Dimethicone NF USP <660> Containers—Glass	Ph.Eur. 2.9.17 Ph.Eur. 3.1.8 Ph.Eur. 3.2.1	ISO 8106 (2004) (118) ISO 11040-4 (2007)	•				
Elastomer (plunger stopper and needle shield)	Dimethicone NF USP <381> Elastomeric Closures for Injection USP <661> Containers—Plastics	ISO 8871-1 (2003) ISO 8871-2 (2003) ISO 8871-4 (2006) ISO 8871-5 (2005) ISO 11040-5 (2012)	Ph.Eur. 3.1.8 Ph.Eur. 3.1.9 Ph.Eur. 3.2.9		•		•	
Needle	ISO 23908 (2011) ISO 594-2	ISO 7864 ISO 9626 (1991)				•		
	AISI 304 DIN 13097 ISO 11608-2 (2012) U.S. Congress, Needlestick Safety and Prevention Act	FDA, Medical Devices with Sharps Injury Prevention Features EU, Framework Agreement on Prevention from Sharp Injuries in the Hospital and Health-care Sector				•	•	•
General Safety	USP <1031> The Biocompatibility of Materials Used in Drug Containers, Medical Devices and Implants	USP <87> Biological Reactivity Tests, In Vitro USP <88> Biological Reactivity Tests, In Vivo ISO 10993						•
Compatibility	Packaging components that are compatible with the drug product do not interact sufficiently to cause unacceptable changes in the quality of either the dosage form or the packaging component.							
Extractables and Leachables	USP <1663> Extractables Associated with Pharmaceutical Packaging Systems (in development) USP <1664> Leachables Threshold and Best Practices (in development) (ref to PF)			•	•	•	•	•

 © 2015 Parenteral Drug Association, Inc.

Licensed to Kuo, Li-Hung/Amaran Biotechnology, Inc.: Copying and Distribution Prohibited.

Category	Descriptions of Tests, Standards, and Guidance Documents				Syringe Component				
					Syringe	Plunger stopper	Needle	Needle Shield	Assembled
Performance	The container closure system must be able to function in the manner for which it was designed. Drug delivery refers to ability of the packaging system to deliver the dosage form in the amount stated in the label claims.								
Performance as Combination Product	USP <1> Injections			ISO 7864					•
	Ph.Eur. 2.9.17. Test for Extractable Volume of Parenteral Preparations			ISO 9626					
	FDA Guidance documents: Medical Device Use-Safety - incorporating HFE into Risk Management Draft Guidance for Industry and Food and Drug Administration Staff—Applying Human Factors and Usability Engineering to Optimize Medical Device Design Technical Considerations for Pen, Jet, and Related Injectors Intended for Use with Drugs and Biological Products (draft guidance) Glass Syringes for Delivering Drug and Biologic Products Submissions for Post-approval Modifications to a Combination Product Approved Under a BLA, NDA, or PMA **ISO Standard:** ISO 7886-1:1993 Sterile hypodermic syringes for single use — Part 1: Syringes for manual use, Annex C - Method for determination of dead space								•
General Quality Systems	21 CFR 210	21 CFR 610	ICH Q8	ISO 15378 (2006)					•
	21 CFR 211	21 CFR 820	ICH Q9	EN ISO 13485 (2003)					
			ICH Q10	EN ISO 14971 (2007)					
Packaging/ Shipping	ISO 11607	ASTM F1929	ASTM D4728	ASTM D6653					•
	ISO 14644-1	ASTM F1980	ASTM D5276	ISTA 3 E					
	ASTM F88/F88M-09	ASTM D4169	ASTM D5487						

 © 2015 Parenteral Drug Association, Inc.

Licensed to Kuo, Li-Hung/Amaran Biotechnology, Inc.: Copying and Distribution Prohibited.

18.0 Appendix IV: Compound Classification with the Associated Threshold of Toxicological Concern (TTC)

The following table reflects the compound classifications used in the threshold evaluation of extractables and leachables for a PFS system.

Compound Class PQRI - PODP	Compound Class Details	Suggested TTC
Class I	Cramer Classification – Class I "***Low Risk***" Substances of simple chemical structure with known metabolic pathways and innocuous end products which suggest a low order of oral toxicity	150 µg/day
Class II	Cramer Classification – Class II "***Medium Risk***" Substances that are intermediate in toxicity	45 µg/day
Class III	Cramer Classification – Class III "***High Risk***" Substances with chemical structures that permit no strong initial impression of safety and may even suggest a significant toxicity (Given that no Toxicity alerts are generated for the following toxicological end points: sensitization, irritation, genotoxicity, mutagenicity, carcinogenicity, teratogenicity)	7.5 µg/day
Class IV	Sensitizer – irritant – teratogen: compounds suspected of endocrine disruptor activity	5 µg/day
Class V	Genotoxin, mutagen, carcinogen + Substances of very high concern (e.g., DEHP, bisphenol A)	1.5 µg/day

 © 2015 Parenteral Drug Association, Inc.